# XMODS™ Custom RC Body Kits

60-8513
60-8514
60-8515
60-8516
60-8517
60-8518

The XMODS™ Custom RC body kits provide the opportunity to customize the body of your car with skirts, tailpipe, bumpers, hood and spoilers. You can also change the controller's steering wheel.

## 1

**Assemble the upgrade body parts in the order listed below.**

1) Replace the front bumper.
2) Replace the hood.
3) Replace the left and right side body skirts.
4) Install or replace the spoiler.
   *(See p.2 for specific instructions about installing the spoiler on the Acura and Civic body tops.)*
5) Screw the tailpipe to the new rear bumper and replace the bumper.

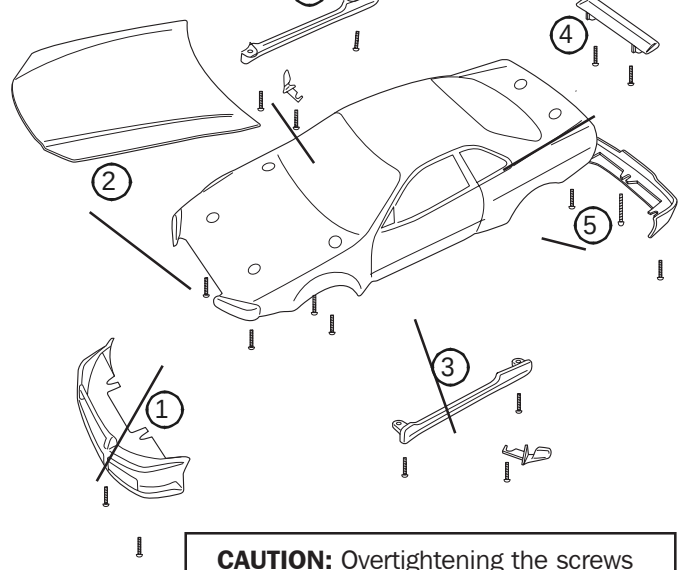


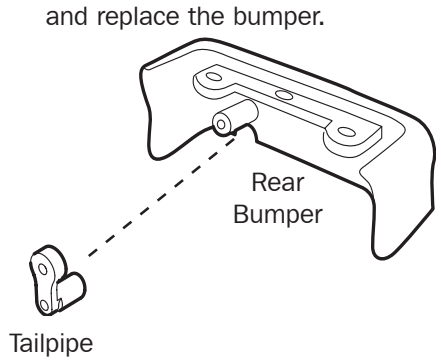


**CAUTION:** Overtightening the screws can strip the screw holes.

60-8513 and 60-8514 include two extra screws which are slightly longer than the other two screws included in each kit. When installing the spoiler for 60-8513 and 60-8514, use the longer screws.

## 2

**Install the controller's new steering wheel.**

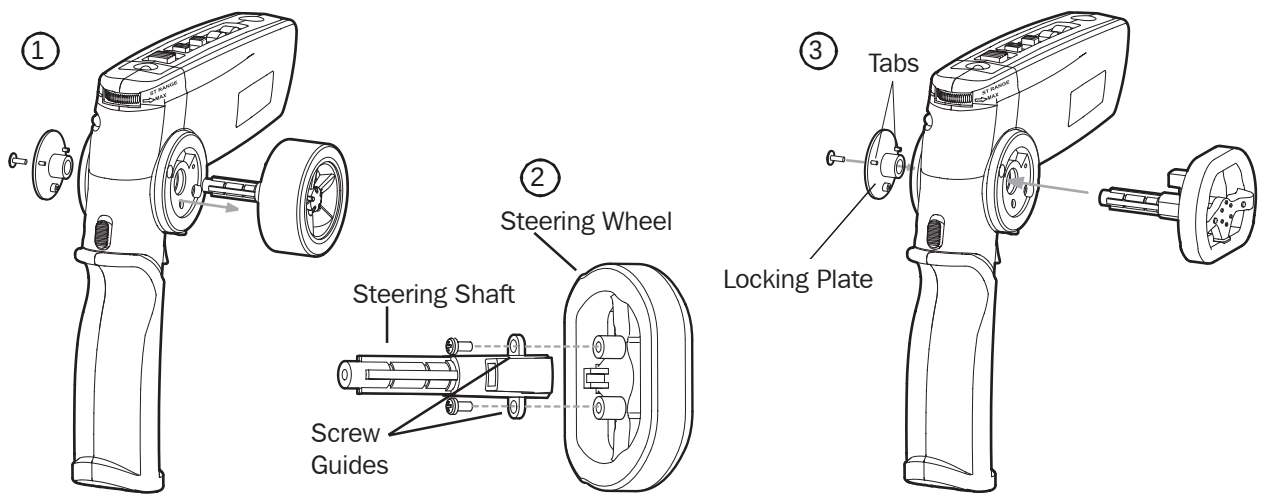


1) Remove the screw from your controller's locking plate.
2) Affix the steering shaft to the upgrade steering wheel with two screws.
3) Align and insert the steering shaft into the controller.
   Align tabs on the locking plate and affix with the original screw.

# 3

## Installing the Spoiler.

### Installing the Spoiler on the Skyline

1) Remove the Starter Kit spoiler.
2) Select the spoiler you want to install and align it with the matching holes underneath the body top.
3) Screw the spoiler to the body from below the body.

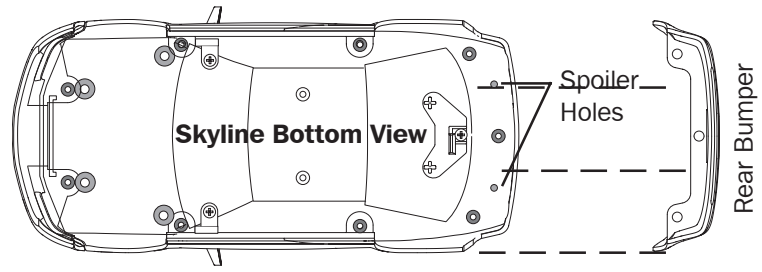


### Installing the Spoiler on the Supra

1) Remove the Starter Kit spoiler.
2) If the spoiler aligns to an undrilled set of marks, drill a 2mm hole in each mark.*
3) Screw the spoiler to the body from below the body using the holes that line up with the desired spoiler.

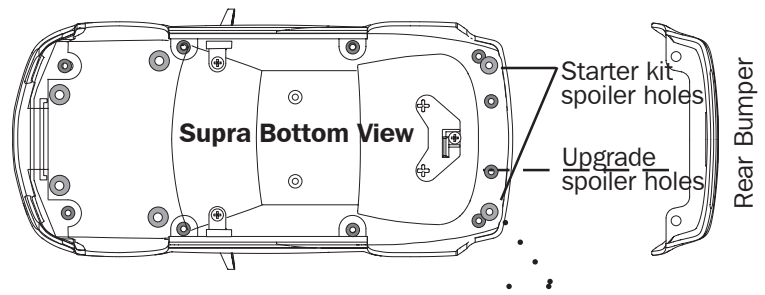


### Installing the Civic Spoiler

1) Drill a 2mm hole in the body in the center of each mark.*
2) Screw the spoiler to the body from below the body.

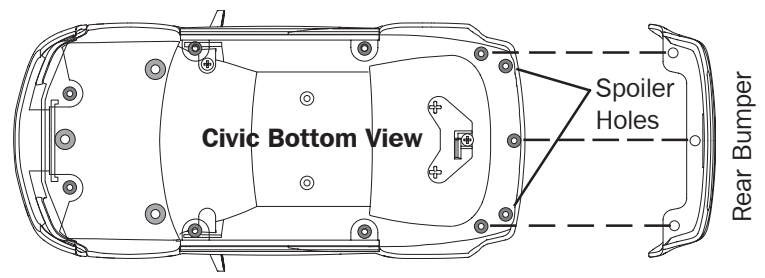


### Installing the Acura RSX Spoiler

1) Select the spoiler you want to install.
2) Align the spoiler to the matching screw marks on the underside of the body.
3) If the spoiler aligns to an undrilled set of marks, drill a 2mm hole in each mark.*
4) Screw the spoiler to the body from below the body using the holes that line up with the desired spoiler.

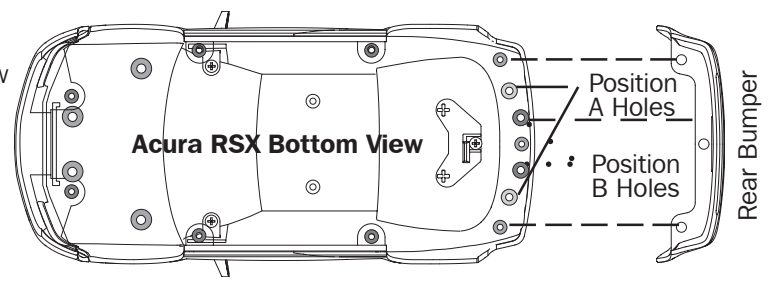


**** When you purchase an XMODS Tool Kit, 60-8519, you will receive a hand drill you can use to drill new spoiler holes.***

©2003 RadioShack Corporation
All Rights Reserved.
RadioShack and RadioShack.com are trademarks used by RadioShack Corporation.

Printed in China

www.xmodsRC.com